R1-5 Tipping Bucket Rain Gauge Sensor

The R1-5 sensor is a tipping bucket-type device designed for use in remote monitoring. A lead switch or mercury lead switch detects each tip of the collection bucket, which pours out a specified amount of rain that has entered through the 200 mm diameter inlet, and a connection pulse signal is output. The sensor is connected to an electrical contact or magnetic counter using a 2-pole cable. Options available with the R1-5 sensor include a heated version for use in cold locations (RJ1-5), and a sensor with two contact outputs (R1-5W).

FEATURES

Allows remote observation, compact and lightweight, affordable, highly durable stainless steel body and polycarbonate sensor unit

SPECIFICATIONS

Model	Tipping bucket	
Inlet diameter	200 mm diam.	
Single-tip volume	0.5 mm (15.7 cc), 1.0 mm (31.4 cc), 0.25 mm (7.85 cc)	
Accuracy	±0.5 mm with rainfall ≤20 mm/h ±3%F.S. with rainfall >20 mm/h	
Output signals	Electrical contact signal (contact time ≥0.1 s)	
	R1-5	single contact output
	R1-5W	dual contact output
Power source	Heated model requires a 100 V AC power source.	
Size	Approx. 222 mm diam. × 450 mm	
Weight	Approx. 1.9 kg, or w/ heater 3.0 kg	
Standard specifications	R1-5:	200 mm inlet, 0.5 mm tip, lead switch, single-contact output
Other avail. sensors	R2-5:	1.0 mm tip
	R3-5:	0.25 mm tip

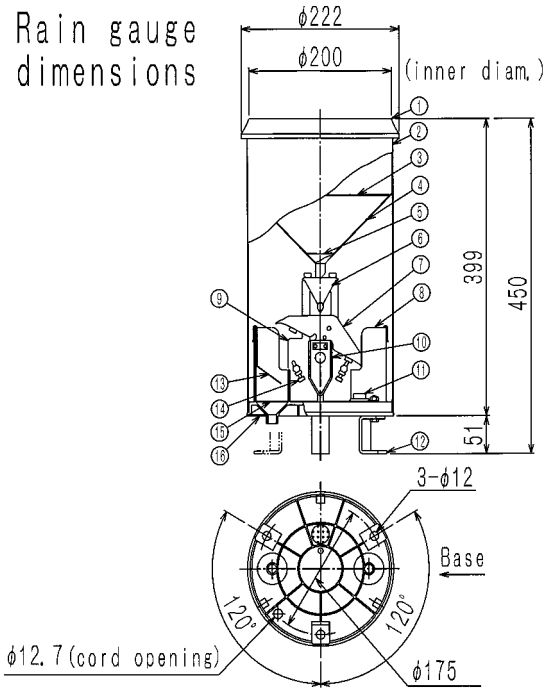

① Inlet, polycarbonate resin
② Body, SUS304 (0.6 t)
③ Large filter, SUS304
④ Funnel, aluminum (painted)
⑤ Small filter, SUS304
⑥ Filtered water container, polycarbonate resin
⑦ Tipping bucket, polycarbonate resin
⑧ Drain basin, polycarbonate resin
⑨ Base plate, polycarbonate resin
⑩ Bearing plate, polycarbonate resin
⑪ Level surface, glass
⑫ Mounting legs, SUS304
⑬ Drip screen, SUS304
⑭ Stopper bolt, SUS303
⑮ Insect screen, SUS304
⑯ Base, polycarbonate resin

KOMATSU FACTORY CO.,LTD.
TOKYO
WEATHER INSTRUMENTS FABRICATION
1-12-13 Higashiyama Meguro-ku Tokyo 153-0043 Japan
TEL : 03-3719-7131
FAX : 03-3719-7134
e-mail : info@komatsuins.co.jp